SILT TRAP MANHOLE

SCALE 1:25

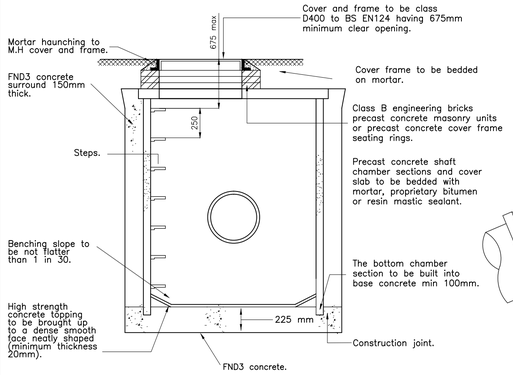

Pipe Dia.	Rocker Pipe Length.
150–600	0.6m
675–750	1.0m
825 and over.	1.25m

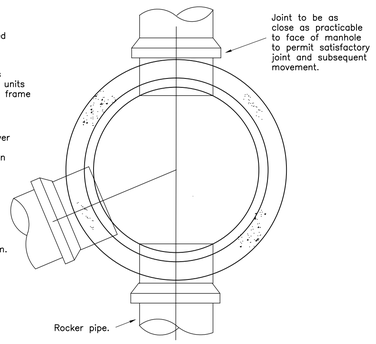

UNLESS SPECIFIED ELSEWHERE CONCRETE TO BE GEN3

TRENCH RE-INSTATEMENT

SCALE 1:25

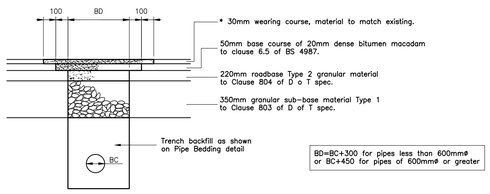

Permanent trench reinstatement in exist. c/w(flexible).

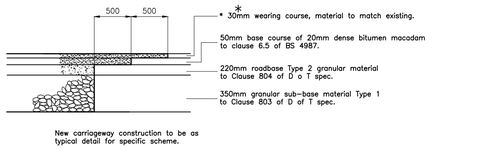

Detail of surfacing overlap where new c/w joins old.

Existing c/w construction only assumed, actual specification to be determined on site.

ROAD GULLEY

SCALE 1:10

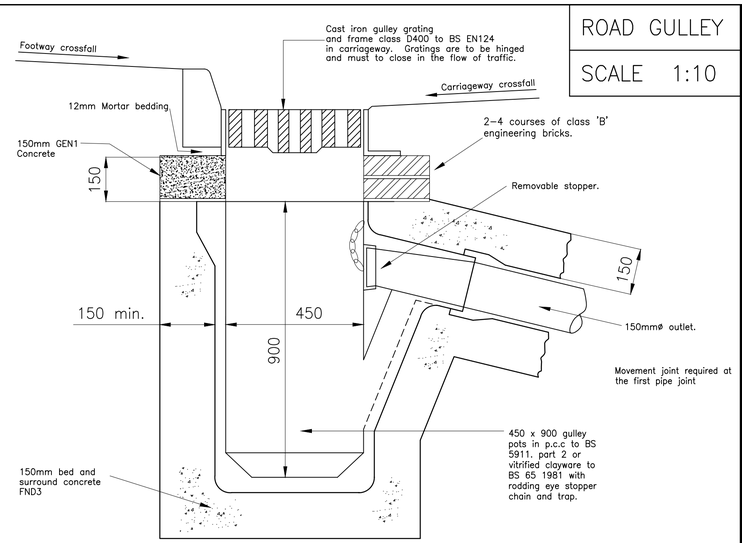

NOTES

(C) THIS DRAWING IS COPYRIGHT

CONTRACTORS MUST CHECK ALL DIMENSIONS ON SITE. ONLY FIGURED DIMENSIONS ARE TO BE WORKED FROM. DISCREPANCIES MUST BE REPORTED IMMEDIATELY TO JUBB CONSULTING ENGINEERS BEFORE PROCEEDING.

ALWAYS CHECK FOR LATER REVISIONS OF THIS DRAWING.

NOTES.

1. TO BE READ IN CONJUNCTION WITH MANHOLE SCHEDULE AND DRAINAGE SPECIFICATION DOCUMENT.
2. ALL LEVELS ARE RELATED TO ORDNANCE SURVEY.
3. ALL ADOPTABLE DRAINAGE TO COMPLY WITH SEWERS FOR ADOPTION 6TH EDITION.
4. ALL PRIVATE DRAINAGE TO COMPLY WITH BUILDING DRAINAGE BS 8301 AND CURRENT BUILDING REGULATIONS SECTION H
5. SAFETY CHAINS SHOULD BE FITTED ACROSS THE MANHOLE OUTGOING PIPES WITH A DIAMETER OF 900MM AND ABOVE.
6. ALL MANHOLE COVERS TO BE D400 HEAVY DUTY COVERS THOUGHOUT ADOPTABLE HIGHWAYS AREAS INCLUDING THOSE PLACED IN FOOTWAY.

MANHOLE (TYPE C)

SCALE 1:25

Depth from cover level to soffit of pipe 1.0m to 1.5m

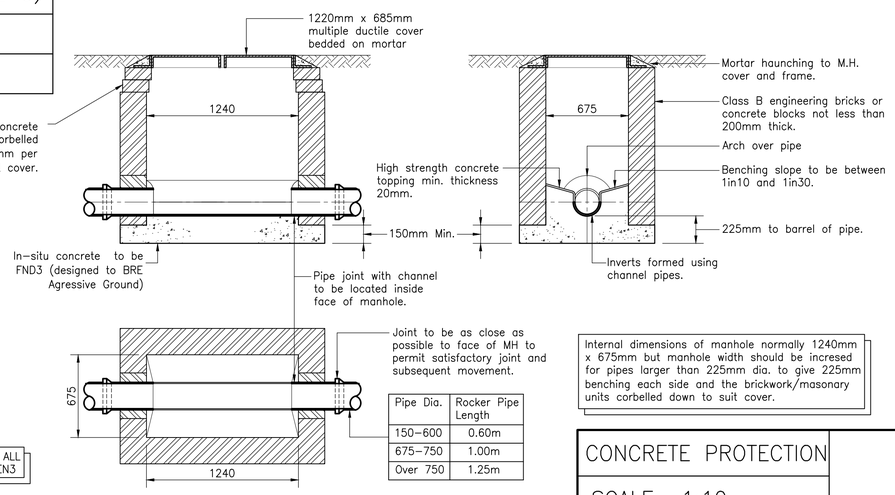

Pipe Dia.	Rocker Pipe Length
150–600	0.60m
675–750	1.00m
Over 750	1.25m

Internal dimensions of manhole normally 1240mm x 675mm but manhole width should be incresed for pipes larger than 225mm dia. to give 225mm benching each side and the brickwork/masonary units corbelled down to suit cover.

UNLESS NOTED ELSEWHERE ALL INSITU CONCRETE TO BE GEN3

MANHOLE (TYPE B)

NTS

Maximum depth from cover level to soffit of pipe 3.0m

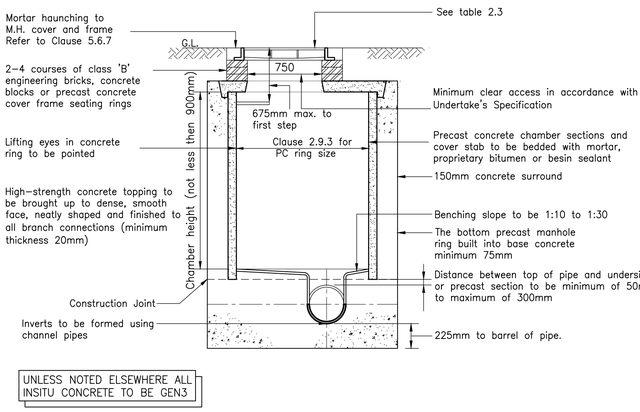

UNLESS NOTED ELSEWHERE ALL INSITU CONCRETE TO BE GEN3

Pipe Dia.	Rocker Pipe Length.
150–600	0.6m
675–750	1.0m
825 and over.	1.25m

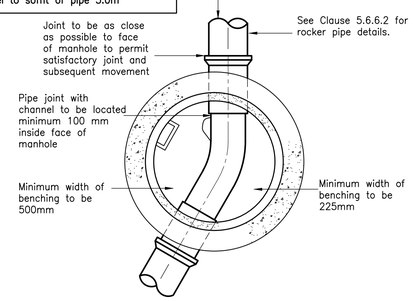

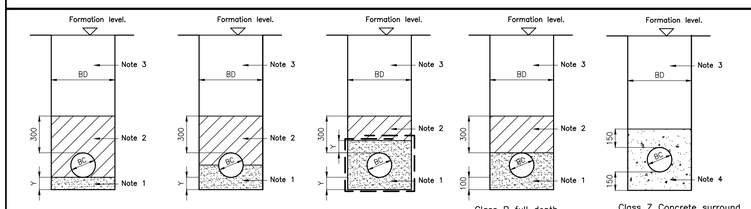

nominal pipe diameter	BS882 Coarse aggregate table 4.	
	graded aggregate ranges (mm)	single sized aggregate sizes
not exceeding 140mm.	–	10
exceeding 140mm not exceeding 400mm.	20 to 5 or 14 to 5.	10, 14 or 20
exceeding 400mm.	14 to 5, 20 to 5 or 40 to 5	

Table 5/5 clause 503 of D of T spec.

NOTES:

1. Pipe bedding material to table 5/5 of clause 503 of D of T spec.–see table.
2. Acceptable fill class 1, 2, or 3 to table 6/1 of clause 601 of D of T spec. lightly compacted by hand.
3. Acceptable fill class 1, 2, or 3 to table 6/1 of clause 601 of D of T spec. well compacted
4. Grade GEN3 concrete.
5. 150mm gulley connections to have 150mm concrete surround with 25mm thick polystyrene formers at each flexible joint.
6. Trench width BD= BC+300 for pipes less than 600ø BC+450 for pipes 600ø and greater. Y=BC/6.....100mm minimum. BC=pipe external dia.
7. For pipe materials, class of pipe and depth see sewer long sections.

PIPE BEDDING

SCALE 1:25

CONCRETE PROTECTION

SCALE 1:10

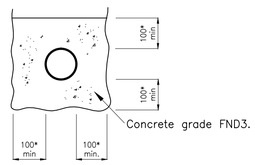

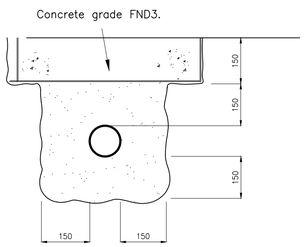

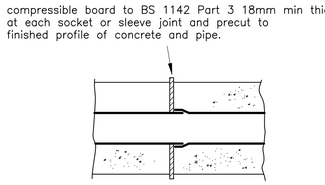

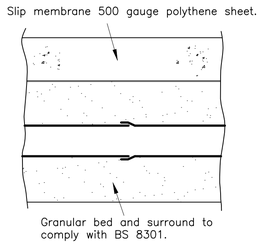

MANHOLE (TYPE E)

SCALE 1:25

Depth from cover level to soffit of pipe less then 1.0m

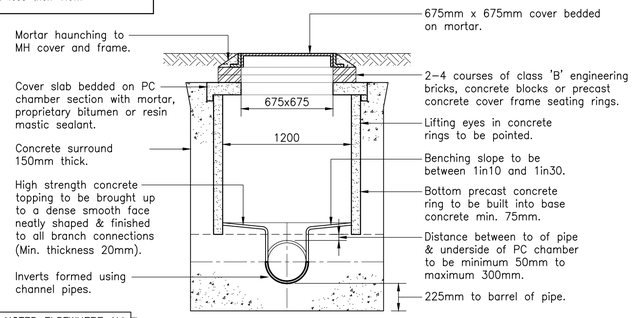

UNLESS NOTED ELSEWHERE ALL INSITU CONCRETE TO BE GEN3

NOTES:

1. The minimum size of sewer where guide bars, safety chains, or other safety devices are required in manholes shall be 375mm in diameter.
2. Manhole covers shall be marked FW for foul water manholes and SW for surface water manholes.
3. All ironwork to be kite marked by BSI or certified by equal inspection authority.
4. The planning, design and construction of sewers shall be carried out in accordance with 'Sewers for Adoption' 6th Edition, a design and construction guide for developers, the Civil Engineering Specification for the Water Industry 6th edition and South West Water amendments to CESWI dated may 1999.
5. Backdrops shall be a minimum of 1.0m in height. Maximum 1.5m above benching.
6. Compliance with Health and Safety matters on any trench/manhole is obligatory and a permit to enter a confined space is required when connecting site drainage to existing public sewerage system. A permit to enter a confined space will be obtained from SWW ltd prior to the works commencing on any public sewerage system. Contractor to provide Method Statement and approval prior to the works commencing on any public sewerage system.
7. Manhole covers and frames shall be ductile iron with a minimum square opening of 675x675mm. Covers shall be double triangle for 675mm square openings and be provided with loose bolted connections. All manhole frames shall typically be 150mm deep but in all cases shall comply with CESWI cl 5.2.32 & Table 5.7 (SFA6 page 124). The manhole frames shall be bedded on resin modified mortar.
8. Red coloured plastic marker tape at least 150mm wide shall be laid at a minimum of 200mm above the soffit of pipe. The tape shall be printed with the words 'GRAVITY SEWER' in bold capital letters throughout its length and at intervals not exceeding 700mm and shall incorporate a corrosion resistant tracing system for non metallic pipes.
9. All type A, B and E manholes should have a concrete surround. Concrete rings shall be sealed using 'Tokstrip' and lifting eyes pointed with resin modified mortar.
10. Only low carbon steel or stainless steel ladders for vertical fixing to manholes will be acceptable.
11. Proposed adoptable sewers are only permitted to have other sewer/gulley connections and other services laid at an angle of between 45 degrees and 90 degrees across the line with a vertical clearance in excess of 300mm.
12. The use of ladders or steps in manholes, wet wells and valve chambers shall comply with the following: Steel plastic encapsulated MH single steps shall not be used in manholes of a greater depth than 1m. Steel plastic encapsulated double steps (polypropylene encapsulated type to comply with wis 4-33-01) may be provided in manholes up to 3m in depth. Ladders shall be provided in accordance with BS 4211 in MHs between 3.0m & 6.0m deep. MHs greater than 6.0m deep shall be specially designed and have intermediate landings. Access holes in intermediate landings shall be provided with galvanized mild steel gratings to prevent persons falling through. The design of deep manholes shall permit the use of a winch or lifting gear mounted at ground level in case of emergencies.

REV	DATE	DESCRIPTION	DR'N	CH'K	APP'D ENG
F	16:07:12	CONSTRUCTION ISSUE.	S.H	T.A	T.A
E	28:02:12	Add & Omits.	S.H		
D	16:01:12	Rocker pipe information amended.	S.H		
C	19:12:11	Notes added at SWW request	S.H		
B	17:11:11	TENDER ISSUE.	S.H		
A	30:09:11	ORIGINAL ISSUE.	S.H		

Issue Status

- [ ] CONCEPT
- [ ] PRELIMINARY
- [ ] TENDER
- [x] CONSTRUCTION
- [ ] H&S FILE ISSUE

Project

BRIXHAM ROAD PAIGNTON

Detail

DRAINAGE CONSTRUCTION DETAILS SHEET 1 OF 2

Client/Architect

CAVANNA HOMES (SW LTD)
PARKBAY DEVELOPMENTS LTD

Scale

As Shown

Project Ref	Drawing No	Rev
P9464	H123	F

CONSULTING ENGINEERS LIMITED

CIVIL STRUCTURAL ENVIRONMENTAL

TRAFFIC HIGHWAYS GEOTECHNICAL

BRISTOL
TEL 0117 922 6266
FAX 0117 922 6813
E.MAIL:-
BRISTOL@JUBB.UK.COM

FARNBOROUGH
TEL 01252 551020
FAX 01252 551025
E.MAIL:-
FARNBOROUGH@JUBB.UK.COM

CARDIFF
TEL 02920 524444
FAX 02920 524445
E.MAIL:-
CARDIFF@JUBB.UK.COM

PLYMOUTH
TEL 01752 797000
FAX 01752 797001
E.MAIL:-
PLYMOUTH@JUBB.UK.COM